Ashing and Analysis of Lard—Polarographic Determination of Iron, Copper, and Nickel

J. M. LUPTON, J. MITCHELL, JR., A. N. OEMLER, and L. B. WOOLAVER,[1] Ammonia Department, E. I. du Pont de Nemours & Co., Inc., Experimental Station, Wilmington 98, Delaware

THE quantitative determination of metallic impurities in organic compounds requires an efficient ashing technique. Usually the samples are placed in tared platinum crucibles, partially volatilized and carbonized under infrared radiation, and finally burned to constant weight in a muffle furnace. The residues so obtained may be fused with potassium bisulfate (potassium pyrosulfate) to convert them to a water soluble form satisfactory for analysis. This technique is impractical for lard (and other organic materials such as glycol) where carbonization is so slow that the sample is burned only with extreme difficulty. In this laboratory it was found necessary to ash the lard in small increments until sufficient residue was accumulated for analysis. This required a period of several days even though a hand torch was used to aid in the process. In addition to its being impractical on a control basis, the method always was subject to mechanical losses and to errors from outside contamination.

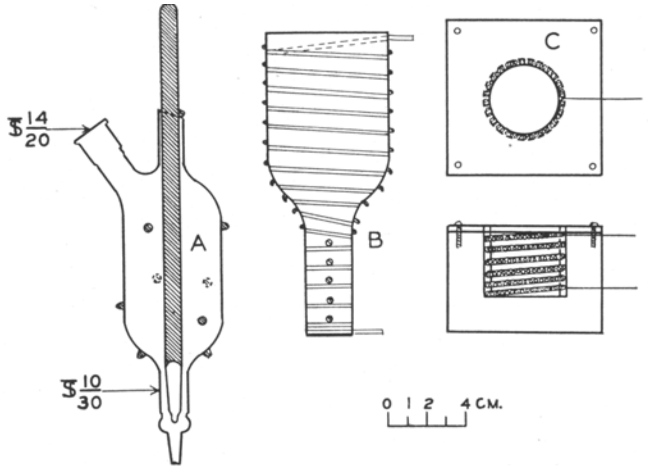

FIG. 1. Apparatus for ashing lard:
A=Sample holder.
B=Heating jacket.
C=Crucible heater.

A new type of ashing technique has been developed, based on the principle of continuous volatilization, in which the liquefied sample is added dropwise to a tared crucible maintained at a sufficiently high temperature continuously to evaporate the organic material but not high enough to encourage flashing. With this apparatus as much as 200 grams of lard have been ashed in an overall period of eight hours. After the necessary initial adjustments have been made, the operation requires only casual attention.

After bisulfate fusion and dissolution the aqueous solution of the ash can be analyzed by several sensitive methods: polarography, colorimetry, or microchemical titration. In this laboratory the polarographic method is used since it has been found to be convenient and accurate for the determination of traces of metals in lard.

Ashing Apparatus

The dispensing apparatus which we have termed, "Dropolator," (Fig. 1) consists of a sample holder, A, made from 50 mm. Pyrex tubing with a drop control rod ground at the base to fit the 10/30 outer grind. By rotating the rod, which contains a solid projection, around the roughened slanted top of the holder, the delivery rate of liquid sample can be accurately controlled. The heating jacket, B, is wound with 0.0625"x0.0045" nichrome ribbon (resistance about 2.2 ohms per foot; total about 19 ohms).

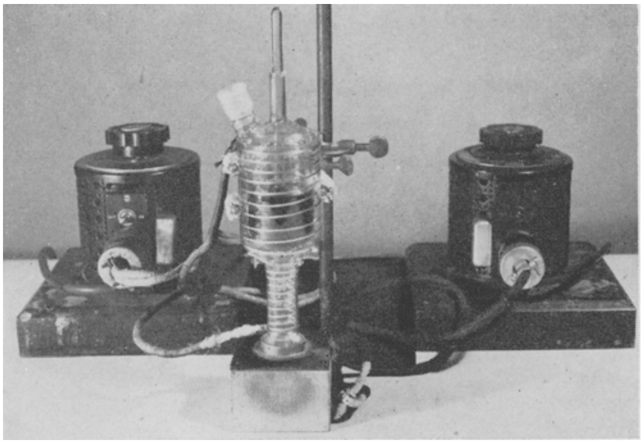

FIG. 2. Complete ashing assembly.

The crucible heater, Fig. 1C, consists of a 3"x3"x2" block of marine insulation (Johns Manville) with a centered hole, 3.4 cm. in diameter, cut to a depth of 3.4 to 3.5 cm. The sides are recessed by screw turning as shown in the figure to accommodate a helical coil wound from No. 24 nichrome wire (resistance 1.67 ohms per foot, total about 23 ohms). A 1/8" transite top, bolted onto the base, has a centered 3.4 cm. opening, large enough to retain a 25-ml., 3.5-cm. diameter (and depth) platinum crucible.

The "Dropolator" with two 110-volt, 5-ampere variacs (one connected to the sample heating jacket, the other to the crucible heater) is assembled, as shown in Fig. 2, in an efficient hood with an adjustable front window.

Ashing Procedure

The sample (150-200 grams of lard) is weighed into the holder which then is placed in the heating jacket. The variac is adjusted to maintain the sample in liquid form (30 to 40 volts for lard and hydrogenated lard). At the same time a tared 25-ml. platinum crucible is placed in the crucible heater and centered under the "Dropolator" with sufficient clearance to permit easy manipulation and free escape of gases.

---

[1] Present address: Department of Chemistry, Mount Allison University, New Brunswick, Canada.

Sufficient heat is supplied to the crucible (dull red) so that the sample is vaporized on contact [2] (about 68 volts for lard and hydrogenated lard). The control rod of the sample holder is rotated carefully until the molten liquid flows dropwise into the crucible. The rate of flow of the drops should be such that the carbon residue remains wetted, but the bulk of the vapors from any given drop is removed before the next drop falls, when the hood window is lowered to about six inches above the bench top. This setting is maintained until all of the sample has been added. Then the crucible is transferred to a muffle furnace to remove the small quantity of residual carbon.

The ash is fused to complete solubility in a weighed quantity of previously fused and powdered potassium bisulfate (special fused potassium bisulfate, J. T. Baker, c.p. analyzed, is satisfactory). The cooled melt is then dissolved in water and diluted in a volumetric flask. The quantity of bisulfate is calculated to give M/10 $KHSO_4$ in this diluted solution. For example, 0.33 g. bisulfate is used if the final solution is diluted to exactly 25 ml. in a volumetric flask.[3]

In fusing the ash with small amounts of bisulfate care must be taken that the ash is completely dissolved. To obtain complete solution it is sometimes necessary to add additional bisulfate and to work at higher final volume.

Blanks should be prepared and analyzed with each group of samples.

Polarographic Analysis

Since the basic details of polarographic procedure have been given by Kolthoff and Lingane (1), only the general outlines of the methods for the determination of iron, copper, and nickel are given here. A recording polarograph, the Leeds and Northrup "Electro-Chemograph," was used. A section of "marine barometer tubing" served as the dropping electrode. (This electrode from which mercury is allowed to flow continuously has given satisfactory service for several years.) The *m*-value of the electrode is determined in air and checked daily; its magnitude is of the order of 1.55 mg. of mercury per second. The drop time is measured with each analysis at the diffusion current potential of the ion under consideration. Depending on the electrolyte and the potential the drop time, *t*, varies between 3 and 6 seconds. In general, a maximum suppressor is unnecessary but, when the need for one arises, 0.01% gelatin is used. For highly accurate results the cell solution should be thermostated although sufficiently satisfactory results in routine control are obtained by measuring the temperature and applying a correction of 2% per degree C. to the diffusion current observed. The temperature coefficient is positive. The dissolved oxygen is removed from the polarographic cell solutions by bubbling with water-saturated oxygen-free nitrogen.

Iron and copper are determined simultaneously in the 0.1 M bisulfate solution of the ash by running a polarogram directly on a portion of the solution. A somewhat greater precaution is taken to avoid chloride contamination in this determination than that taken by Kolthoff and Matsuyama (2) in their polarographic determination of iron and copper in aluminum alloys. To eliminate any possible chloride diffusion from a saturated calomel electrode (S.C.E.), an analogue of this electrode, a saturated sulfate electrode (S.S.E.), is used as the reference electrode. It may be denoted: K_2SO_4 (satd.), $Hg_2SO_4(S)/Hg$. The electrode forms a part of the polarographic cell as shown in Fig. 3 and is separated from the sample solution by a sintered-glass disk and an agar plug which is saturated with potassium nitrate. In case the solution is too concentrated with respect to iron and copper for a satisfactory polarogram, a suitable aliquot is taken and diluted with 0.1 M bisulfate in order to maintain the supporting electrolyte concentration at the same level.

The supporting electrolyte for the polarographic nickel determination is a NH_4Cl–NH_4OH medium. To a suitable aliquot of the bisulfate solution is added the requisite amount of NH_4Cl-NH_4OH solution so that upon dilution to volume the solution for the polarographic cell will be 1 M NH_4OH+1 M NH_4Cl. The effect of slight variations in supporting electrolyte concentration on the diffusion constant of nickel,

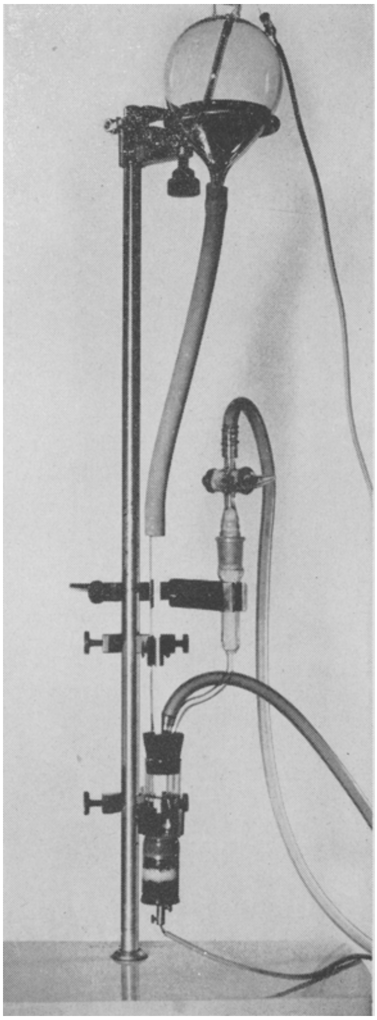

FIG. 3. Polarographic cell.

---

[2] The exact variac setting must be predetermined for any system taking into account the draft conditions of the hood in which the apparatus is placed. A good draft is essential. In most cases, a fume duct arrangement, such as that used in Kjeldahl analyses, probably could be used to aid in removing the vapors.

[3] This transfer requires careful technique to avoid the use of more than 25 ml. of wash water. It is helpful to dampen the bisulfate melt with hot water and press it with a stirring rod. If sufficient sample can be provided it may be more convenient to work at 50 or 100 ml. final volume with a correspondingly larger quantity of bisulfate.

as will occur with dilution by different sized aliquots of the bisulfate solution, is small as indicated by the experiments of Lingane (3) in varying the ammonium chloride concentration in the NH_4Cl-NH_4OH medium. The saturated calomel electrode is used as the reference electrode for the nickel determination. It should be noted that a double wave of copper appears in the ammoniacal medium; the second wave can be used conveniently for analytical purposes (1), serving as a check on the previous determination.

The diffusion current for each ion should be measured at the point at which the current has reached a stable value. The diffusion current, *id*, is a net value obtained by subtracting the residual or blank current from the sample current at constant potential. If a more readily reducible ion is present, the blank current should be corrected by extrapolation for the current due to this ion.

The concentration of the reducible ion, C (millimoles per liter), is readily calculated from the condensed form of the Ilkovic equation as proposed by Lingane (4).

$$C = \frac{id}{I\, m^{2/3}\, t^{1/6}}$$

For each potential at which the diffusion current, *id* (microamperes), is measured the drop time, t (sec.), should be experimentally determined. The rate of flow of the mercury from the capillary, m (mg. per sec.), is determined in air and checked daily. The diffusion current constant, I, is evaluated experimentally with known concentrations of the substance to be determined under conditions identical to the analysis. These calibration polarograms serve also to locate the wave positions and the potentials at which the diffusion current can be satisfactorily measured. Theoretically, only a single calibration is necessary to establish the value of I, but this procedure should be applied with caution when the polarographic wave departs somewhat from the ideal form. In a recent article Taylor (5) has discussed ably the factors and calibration methods involved for accurate polarographic analyses.

Experimental Results

The accuracy of the overall method was checked by addition of known quantities of metal and by comparison with the time-consuming hand ashing technique.

To each of two 150-g. samples of filtered ash-free lard was added exactly 1 ml. of chloroform containing 1.026 milligram of copper propionate. The samples were ashed according to the above procedure. The ash was fused with 0.33 g. of potassium bisulfate and dissolved in 25 ml. of water solution. Polarographic analysis gave results of 0.36 and 0.38 milligram of copper (as CuO) compared to a calculated 0.40 milligram.

Two different unknown samples were analyzed after ashing by hand and by the "Dropolator" method. The first sample gave values of 7.4 p.p.m. ash and 0.1 copper by the hand method and 4 p.p.m. ash with 0.2 p.p.m. copper by the "Dropolator" procedure.[4] The second sample analyzed 18 p.p.m. ash and 1 p.p.m. iron by the "Dropolator" method compared with 17.5 p.p.m. ash and 1.4 p.p.m. iron by the hand method. (There appears to be no systematic error.)

An examination of the precision of the methods probably is more helpful in judging their relative merits. A duplicate analysis of lard by the hand ashing technique gave values of 40 and 44 p.p.m. ash; 0.1 and 0.2 p.p.m. copper; 3 and 2 p.p.m. iron and 11 and 9 p.p.m. nickel. Analyses in triplicate by the "Dropolator" method on another lard sample were 21, 23, and 18 p.p.m. ash; 0.2, 0.2, and 0.3 p.p.m. copper; 0.8, 0.9, and 1.0 p.p.m. iron; and 5, 6, and 6 p.p.m. nickel. When great care is exercised, the hand ashing method seems to have about the same precision as the more rapid "Dropolator" procedure. In the polarographic analyses for these metals, the generally accepted precision and accuracy of about ± 5% relative (1, 5) was verified in this laboratory.

The authors are grateful to Helen K. Funk for her aid in carrying out the above tests.

REFERENCES

1. I. M. Kolthoff and J. J. Lingane, "Polarography," Interscience Publishers, Inc., New York, N. Y., 1941.
2. I. M. Kolthoff and G. Matsuyama, Ind. Eng. Chem., Anal. Ed., *17*, 615 (1945).
3. J. J. Lingane, Ind. Eng. Chem., Anal. Ed., *18*, 429 (1946).
4. J. J. Lingane, Ind. Eng. Chem., Anal. Ed., *15*, 583 (1943).
5. J. K. Taylor, Ind. Eng. Chem., Anal. Ed., *19*, 368 (1947).

---

[4] The higher ash value by the hand method must have been due to the mechanical introduction of some inorganic "inert," since, in general, better recovery of ash has been obtained by the "Dropolator" technique.

Report of Journal Abstracts Committee

THIS committee has been selecting and abstracting literature to supplement the original communications which appear in the Journal of the American Oil Chemists' Society. We select for abstracting more or less those fat and oil contributions of other journals which we feel are of greatest interest to the members of the American Oil Chemists' Society. Accordingly, in the course of the last few years you have noticed an increase in the amount of abstracts on drying oils, biochemistry, and physiology of lipids.

Information on oils of limited commercial interest is not abstracted. General papers and reviews are usually entered only by title and sometimes the titles are annotated to give an indication of the scope of the original.

The committee would appreciate suggestions which would improve their work or make the work more useful. We will incorporate the improvements if they are within the limitation of the time we have for this work.

R. E. BEAL
MARIANNE C. KEATING
LENORE PETCHAFT
M. M. PISKUR, chairman